Circuit correct operation

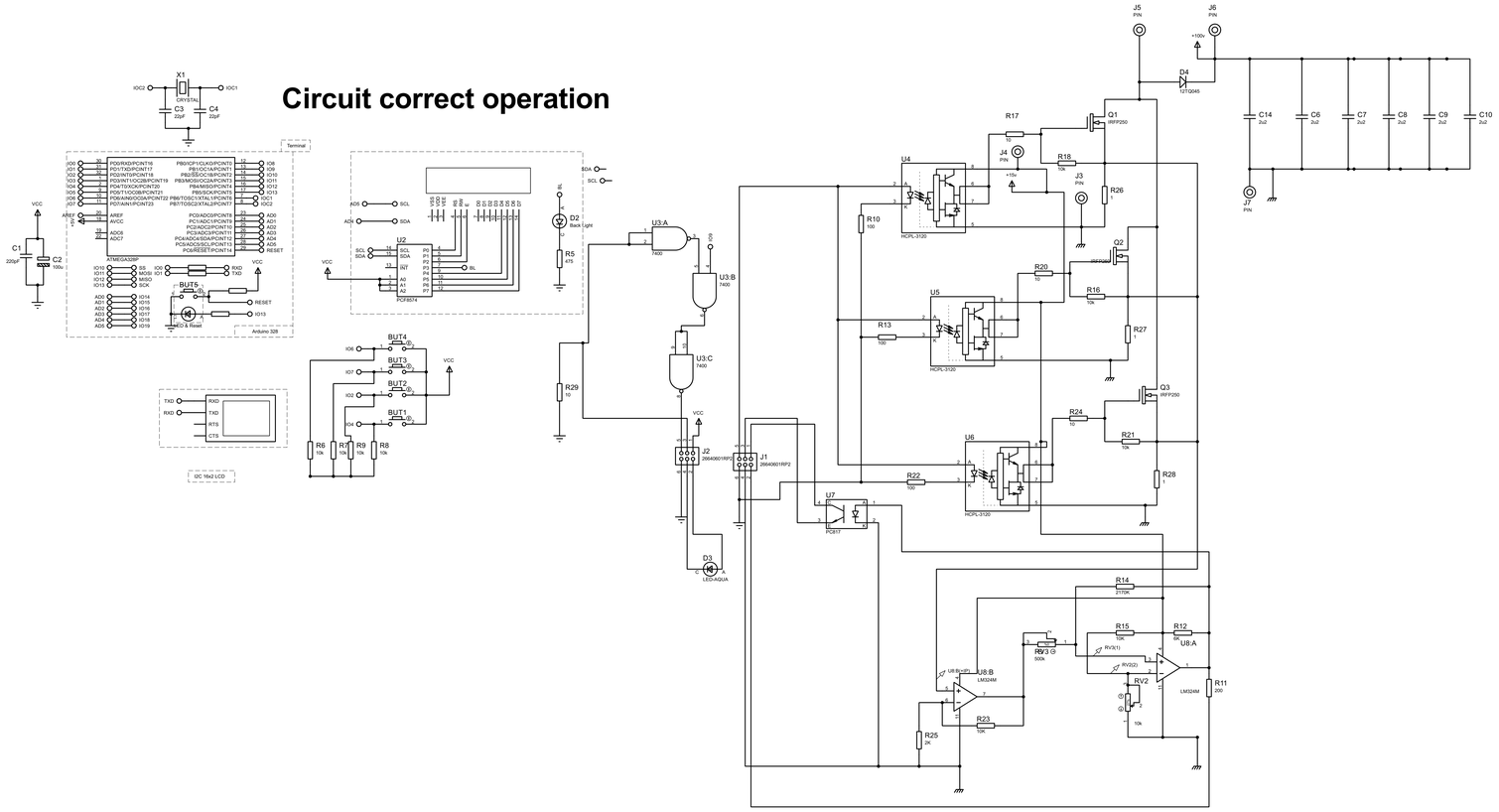

FILE NAME: New Project.pdsprj	DATE: 02.01.2025
DESIGN TITLE: New Project.pdsprj	PAGE: 1 of 1
PATH: C:\Users\Alex\Documents\New Project.pdsprj	TIME: 11:12:12
BY: @AUTHOR REV:@REV	
BOARD: @BOARD	